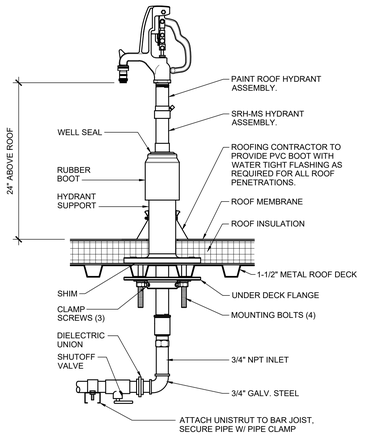

7 A5.0 ROOF HYDRANT INSTALLATION
SCALE: 1 1/2" = 1'-0"

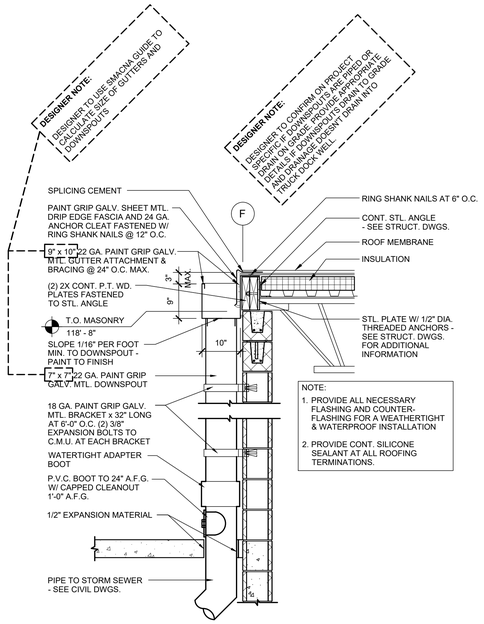

6 A5.0 TYPICAL GUTTER / DOWNSPOUT
SCALE: 3/4" = 1'-0"

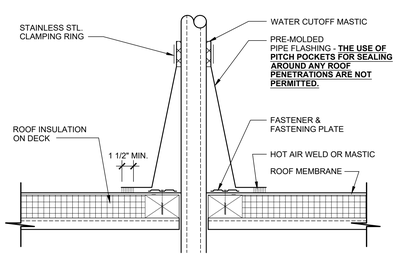

5 A5.0 VENT DETAIL
SCALE: 1 1/2" = 1'-0"

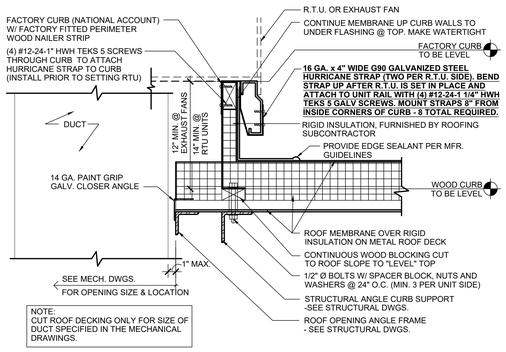

4 A5.0 TYP. CURB AT RTU & EXHAUST FANS
SCALE: 1 1/2" = 1'-0"

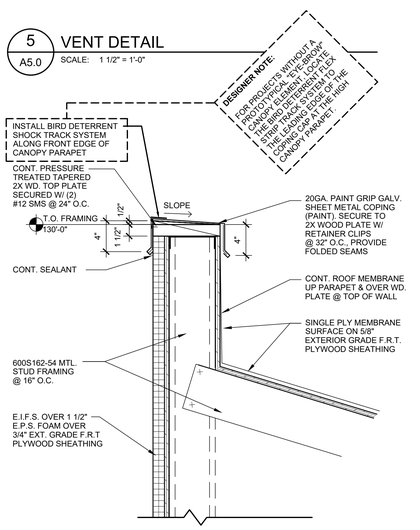

3 A5.0 PARAPET AT ENTRY
SCALE: 1 1/2"=1'-0"

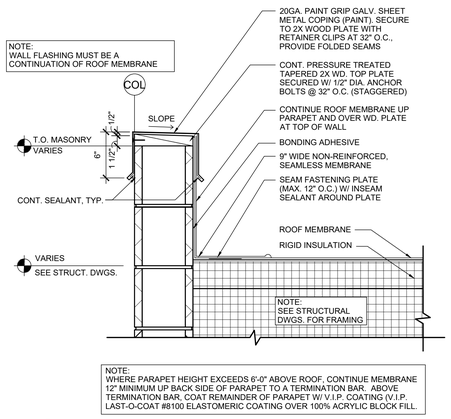

2 A5.0 DETAIL AT PARAPET
SCALE: 1 1/2" = 1'-0"

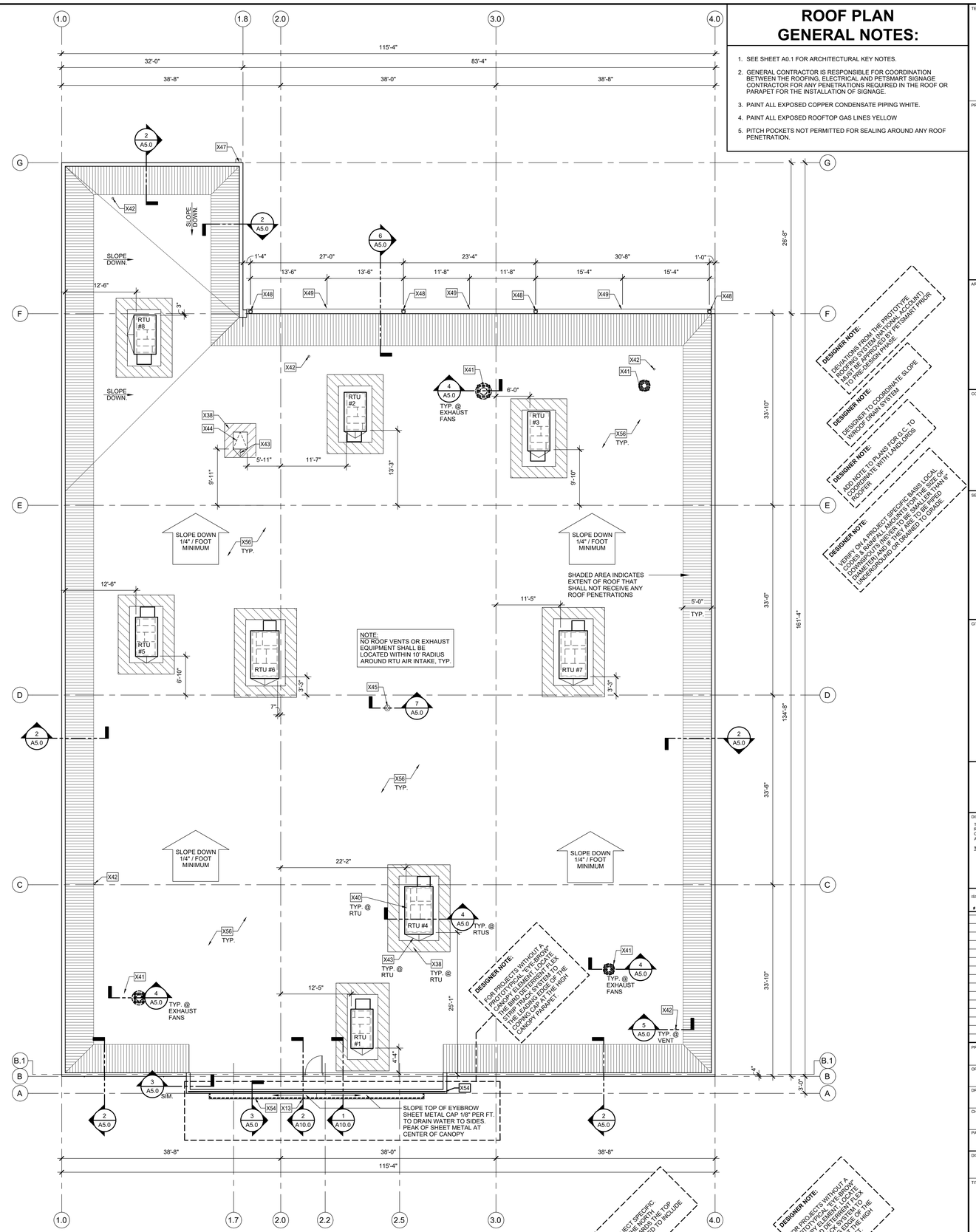

1 A5.0 ROOF PLAN
SCALE: 1/8"=1'-0"

NORTH

ROOF PLAN GENERAL NOTES:

1. SEE SHEET A0.1 FOR ARCHITECTURAL KEY NOTES.
2. GENERAL CONTRACTOR IS RESPONSIBLE FOR COORDINATION BETWEEN THE ROOFING, ELECTRICAL AND PETSMART SIGNAGE CONTRACTOR FOR ANY PENETRATIONS REQUIRED IN THE ROOF OR PARAPET FOR THE INSTALLATION OF SIGNAGE.
3. PAINT ALL EXPOSED COPPER CONDENSATE PIPING WHITE.
4. PAINT ALL EXPOSED ROOFTOP GAS LINES YELLOW
5. PITCH POCKETS NOT PERMITTED FOR SEALING AROUND ANY ROOF PENETRATION.

TENANT:
PETSMART
19601 North 27th Avenue
Phoenix, Arizona 85027 - (623) 580-6100

PROJECT:
16K 2026 U.S. INSTRUCTION SET

AUGUST 10, 2026

ARCHITECT:

CONSULTANT:

SEAL:

CITY SEAL:

DISCLAIMER:
THIS DRAWING AND DESIGN IN COPYRIGHT PROTECTED WHICH SHALL NOT BE USED, REPRODUCED OR REVISED WITHOUT WRITTEN PERMISSION BY PETSMART. THE CONTRACTOR SHALL CHECK AND VERIFY ALL DIMENSIONS AND UTILITY LOCATIONS AND REPORT ALL ERRORS AND OMISSIONS PRIOR TO COMMENCING WORK.
THIS DRAWING IS NOT TO BE SCALED.

ISSUED FOR:

#	DESCRIPTION	DATE

PROJECT NO: 16K 2026 US INSTRUCTION SET
ORIGINAL SCALE: AS INDICATED
IF THIS BAR IS NOT 1" LONG, ADJUST YOUR PLOTTING SCALE
DRAWN BY: XXX
CHECKED BY: XXX
PAGE #: 13 OF: 47
DISCIPLINE: ARCHITECTURAL
TITLE: ROOF PLAN
SHEET NUMBER: A5.0